DuoSeal 1376 Spare Parts

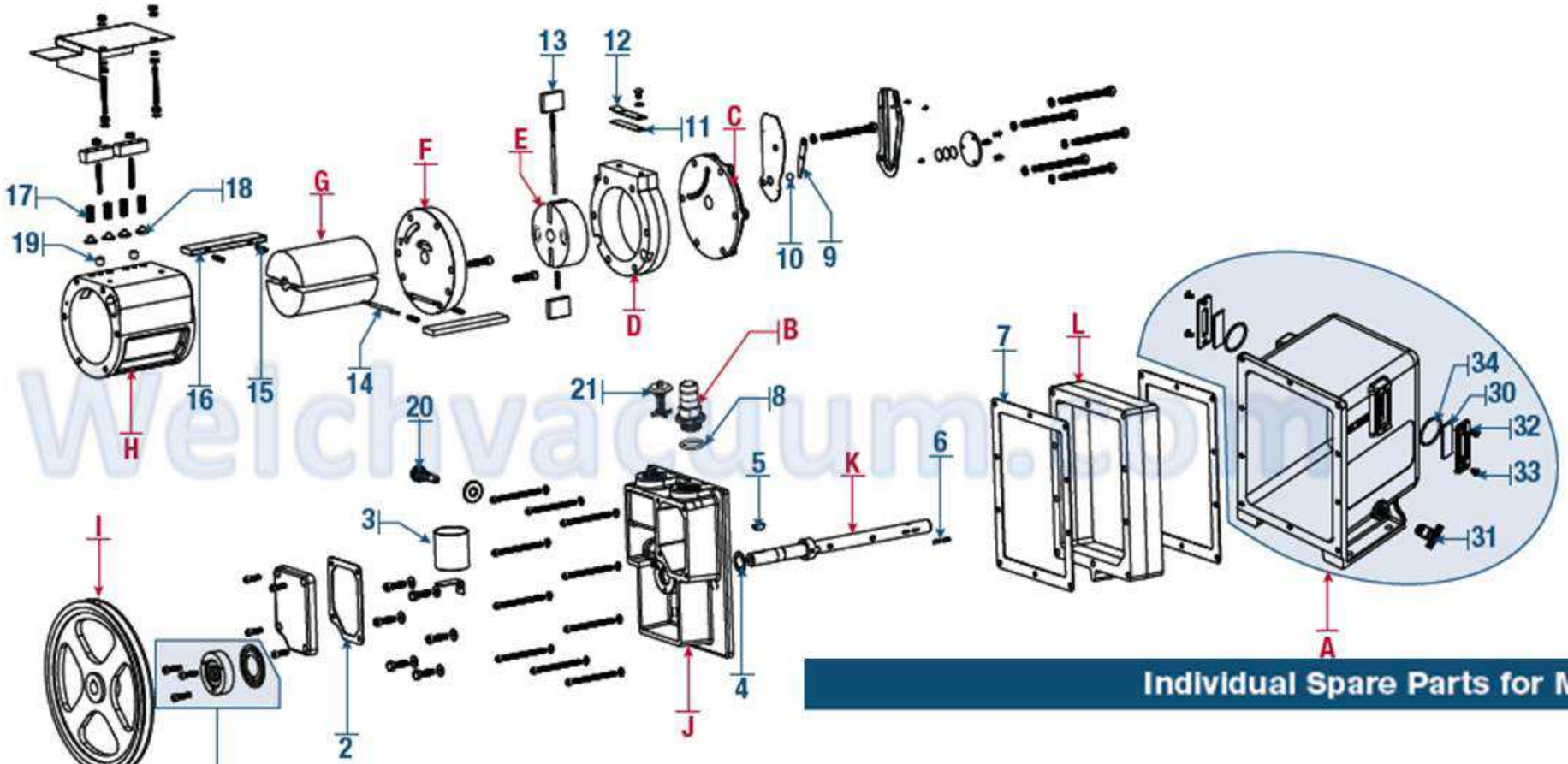

Welchvacuum.com

Individual Spare Parts for Model 1376

ID	Qty.	CAT. No.	Description
A	1	61-8101	Oil Case Assembly
B	1	1393K	Intake Hose Adapter Kit for 13/16" I.D. Hose
C	1	41-2045	Small End Plate
D	1	61-8108D	Exhaust Ring
E	1	41-1518	Small Rotor
F	1	61-8250C	Center Plate
G	1	41-1682	Large Rotor
H	1	41-1688	Large Ring
I	1	41-2074	Pump Pulley with Set Screw
J	1	61-8685	Large End Plate
K	1	41-1683	Shaft
L	1	61-8687	Oil Case Spacer

ID	Qty.	CAT. No.	Description
1	1	★1401D	Mechanical Shaft Seal Kit, 3/4"
	1	★1405A	V-Belt
		★1417P-10	Standard Exhaust Filter
		★1417G	Replacement Exhaust Filter Element
		★1407K-11	DuoSeal Vacuum Pump Oil -1 Qt.
		★1407K-15	DuoSeal Vacuum Pump Oil -1 Ga.
		★331060-5	5' x 13/16" I.D. Vacuum Hose
13	1	41-1487	Vane, Small (Requires 2)
16	1	41-1684	Vane, Large (Requires 2)
	1	1371A-01	Belt Guard & Base Kit
	1	61-8803	Belt Guard/Cover

ID	Qty.	CAT. No.	Description
20	1	41-1736	Gas Ballast Valve
	1	41-0668	Motor Pulley with Set Screw
21	1	61-8912	Exhaust Plug/Cover
	1	1401D-01	Shaft Lip Seal Kit, 3/4"
	1	61-8698	Pump Base
	1	41-1940A	1 HP Motor, 115/230V, 60Hz, 1Ph
30	1	61-2229A	Oil Case Window (Requires 2)
31	1	726130	Drain Valve
32	1	61-2370	Oil Window Cover (Requires 2)
33	1	61-1014	Screw (Requires 4)
34	1	66-0304	O-Ring (Requires 4)